PROPELLER SHAFT ASSEMBLY (SC400)

PR039–02
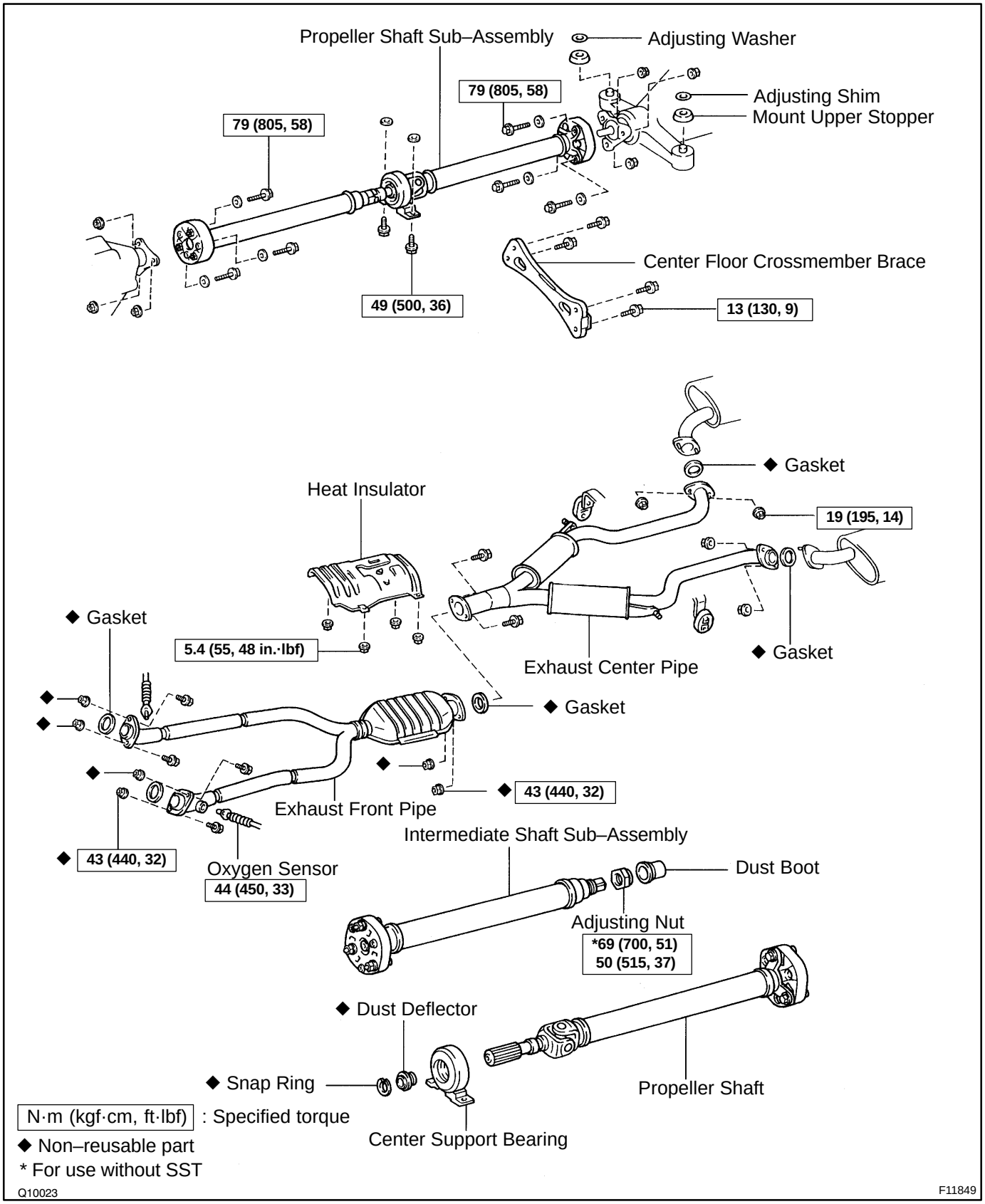
COMPONENTS