BRAKE MASTER CYLINDER

BR0MM–01
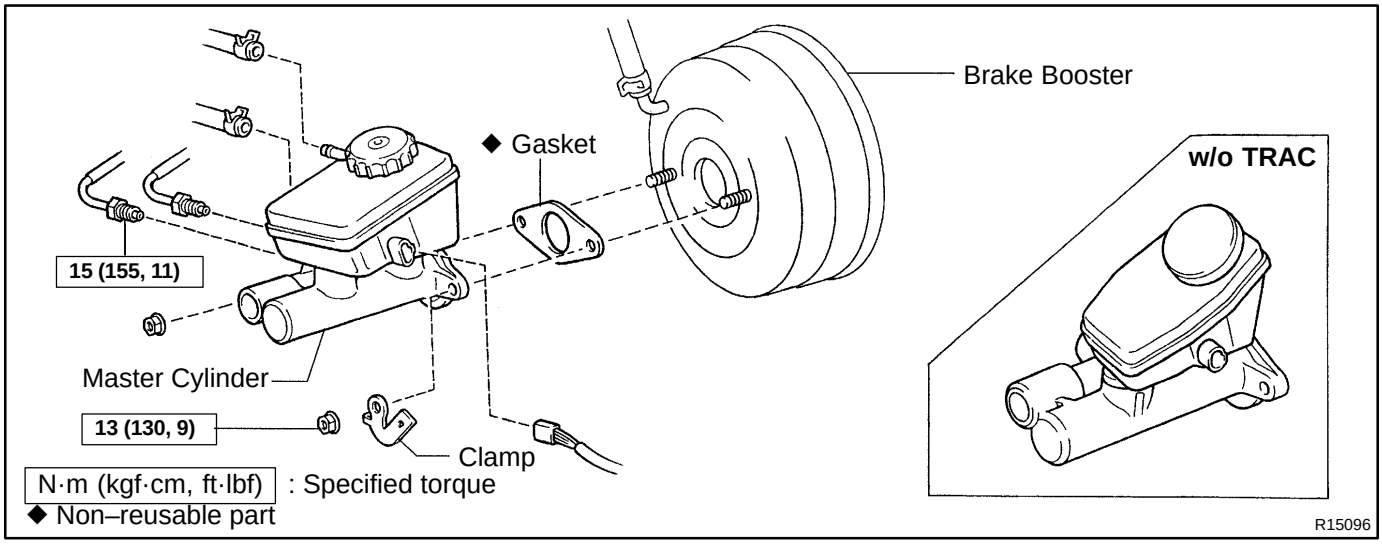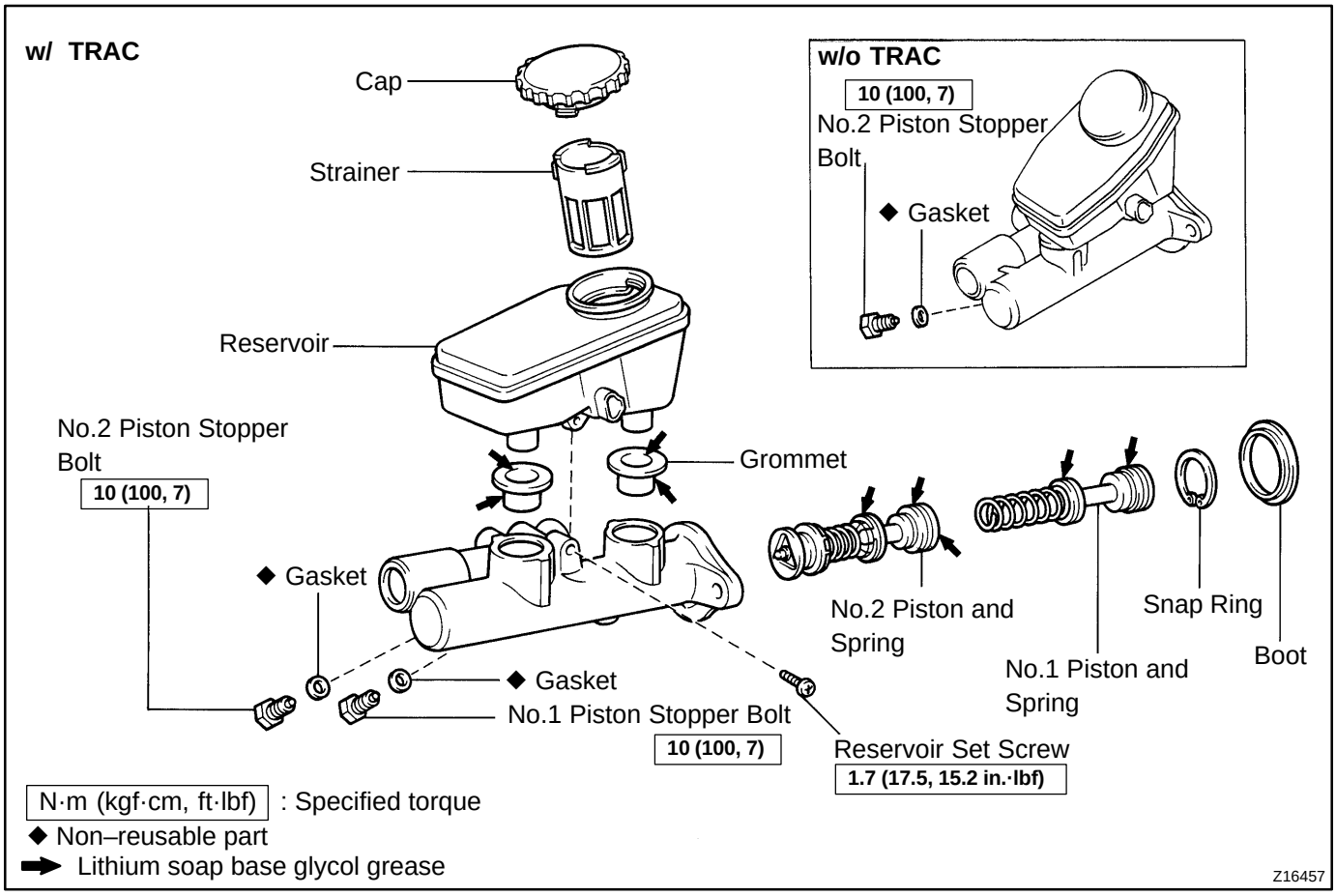
COMPONENTS