FRONT DOOR

COMPONENTS
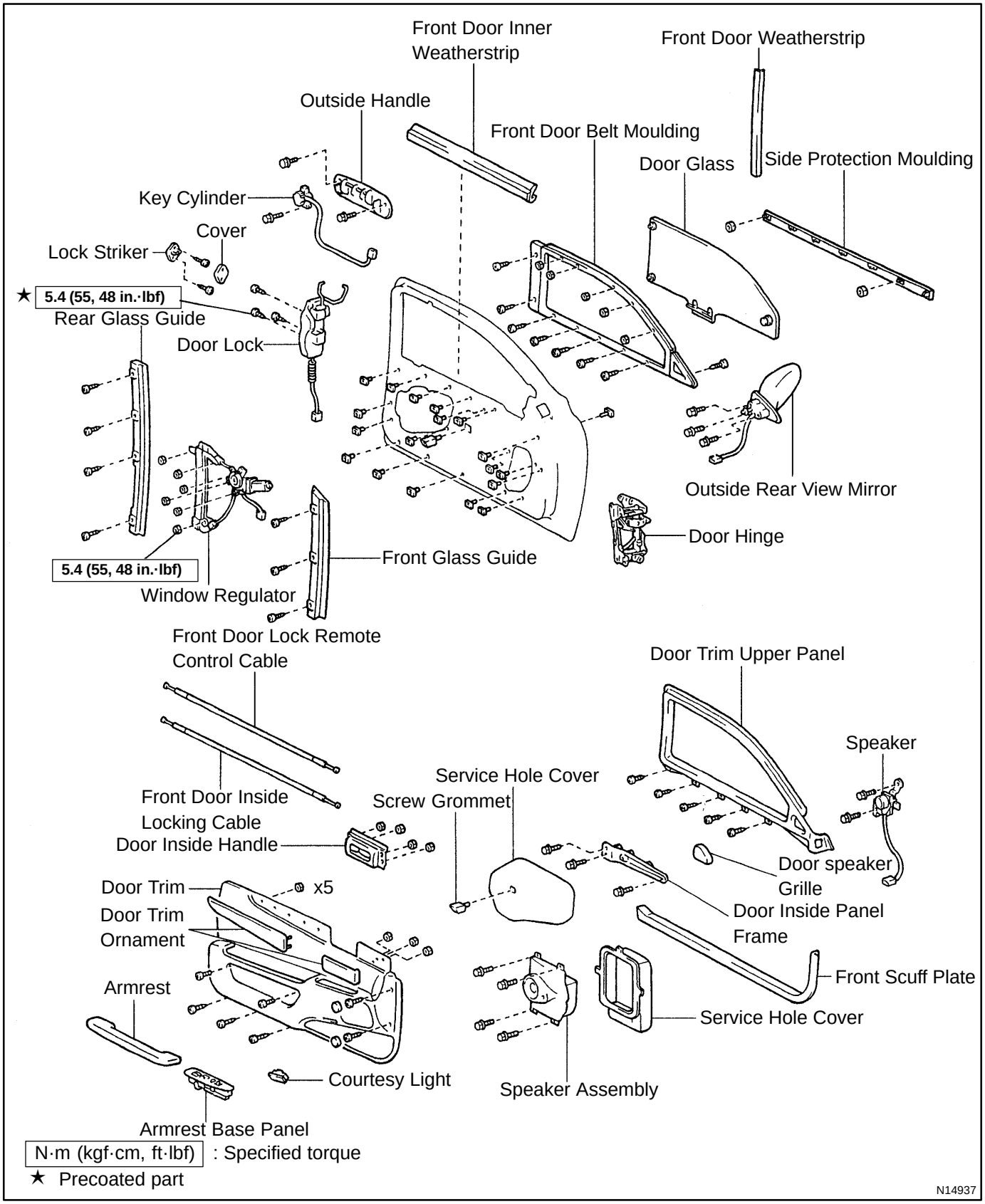
BO12S–01