Ignition Main Relay

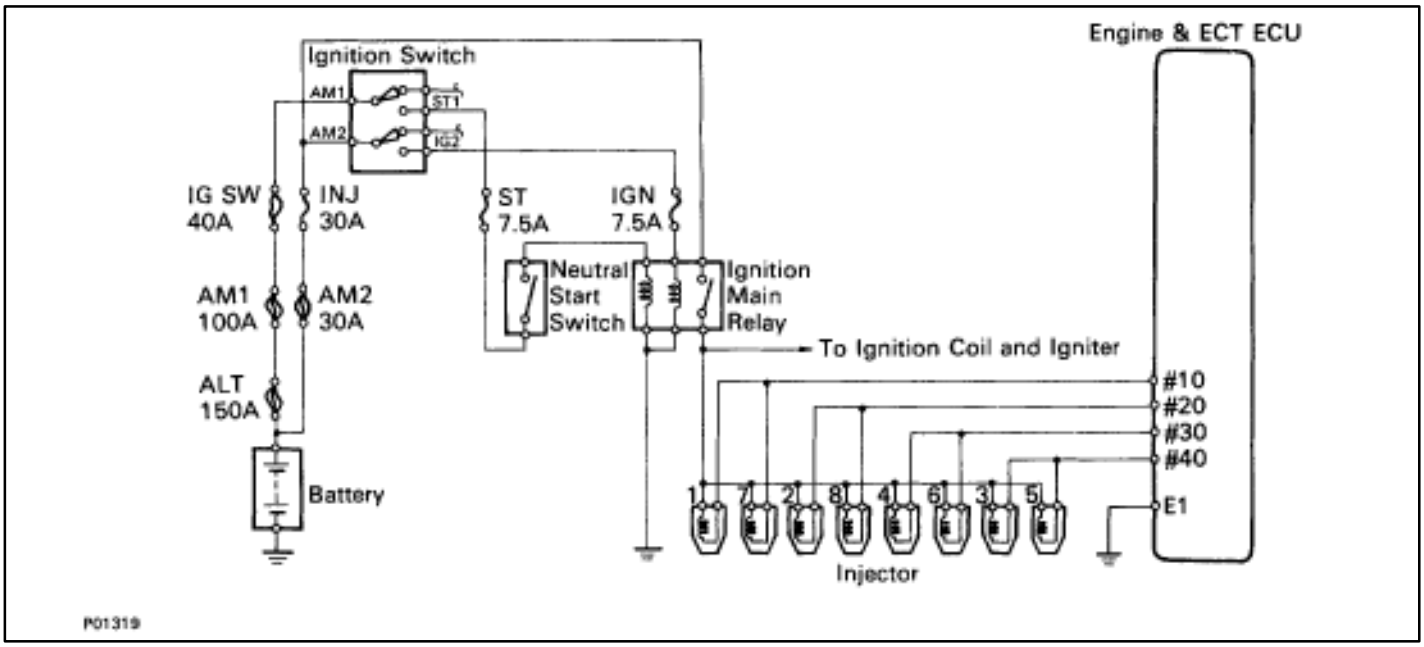

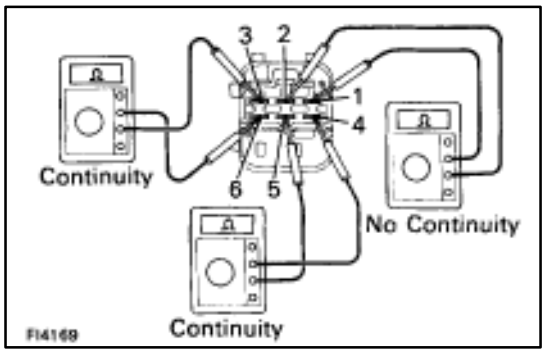

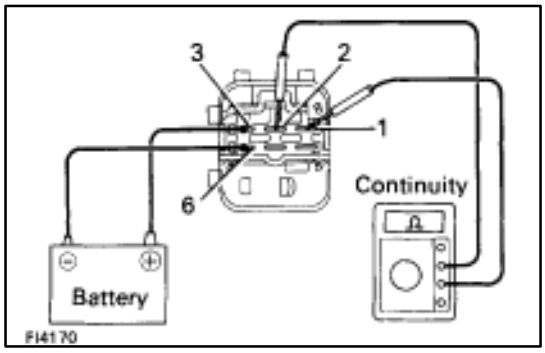

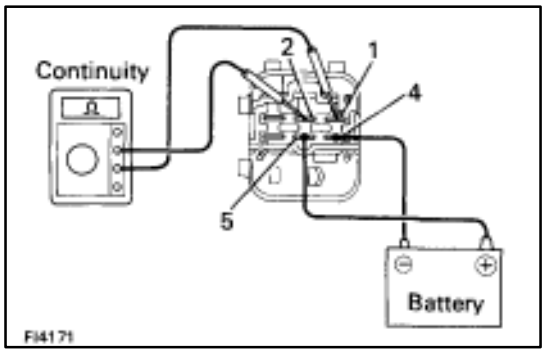

INSPECTION OF IGNITION MAIN RELAY

1. REMOVE IGNITION MAIN RELAY FROM RELAY BOX IN ENGINE COMPARTMENT

2. INSPECT IGNITION MAIN RELAY

A. Inspect relay continuity

(a) Using an ohmmeter, check that there is continuity between terminals 3 and 6.

(b) Check that there is continuity between terminals 4 and 5.

(c) Check that there is no continuity between terminals 1 and 2.

If continuity is not as specified, replace the relay.

B. Inspect relay operation

(a) Apply battery voltage across terminals 3 and 6.

(b) Using an ohmmeter, check that there is continuity between terminals 1 and 2.

(c) Apply battery voltage across terminals 4 and 5.

(d) Check that there is continuity between terminals 1 and 2.

If operation is not as specified, replace the relay.

3. REINSTALL IGNITION MAIN RELAY