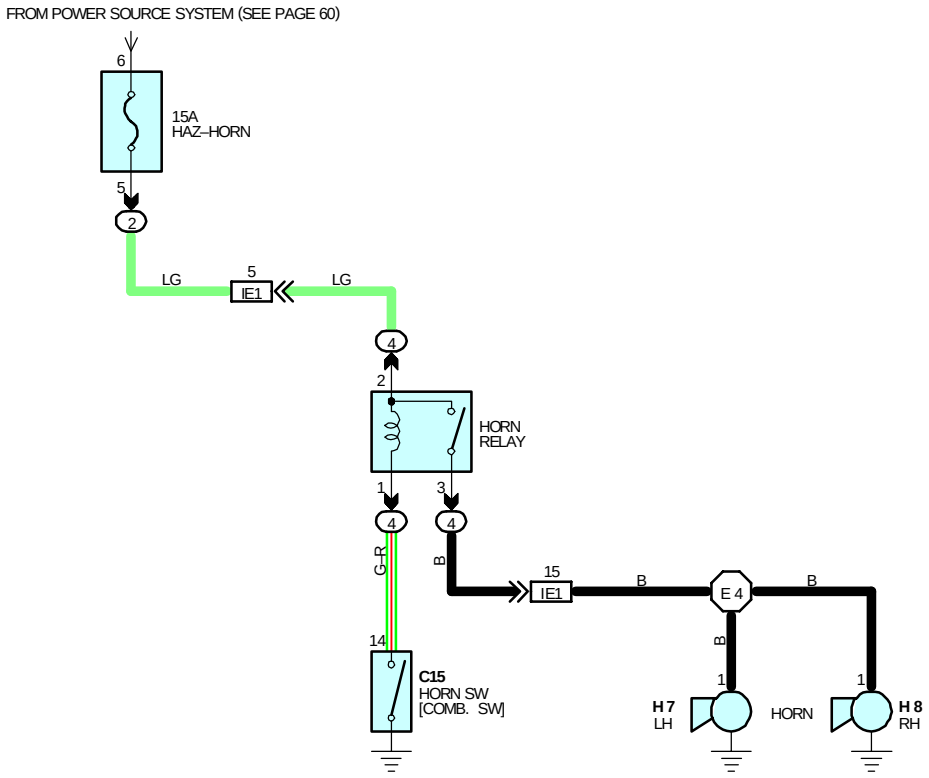

SERVICE HINTS

HORN RELAY

3–2 : CLOSED WITH HORN SW ON

: PARTS LOCATION

CODE	SEE PAGE	CODE	SEE PAGE	CODE	SEE PAGE
C15	30	H 7	26(1UZ–FE),28(2JZ–GE)	H 8	26(1UZ–FE),28(2JZ–GE)

: RELAY BLOCKS

CODE	SEE PAGE	RELAY BLOCKS (RELAY BLOCK LOCATION)
2	19	R/B NO.2 (ENGINE COMPARTMENT LEFT)
4	23	R/B NO.4 (FRONT SIDE OF J/B NO.1)

: CONNECTOR JOINING WIRE HARNESS AND WIRE HARNESS

CODE	SEE PAGE	JOINING WIRE HARNESS AND WIRE HARNESS (CONNECTOR LOCATION)
IE1	40	ENGINE ROOM MAIN WIRE AND COWL WIRE (R/B NO.4)

: SPLICE POINTS

CODE	SEE PAGE	WIRE HARNESS WITH SPLICE POINTS	CODE	SEE PAGE	WIRE HARNESS WITH SPLICE POINTS
E4	36(1UZ–FE)	ENGINE ROOM MAIN WIRE	E 4	38(2JZ–GE)	ENGINE ROOM MAIN WIRE

C15

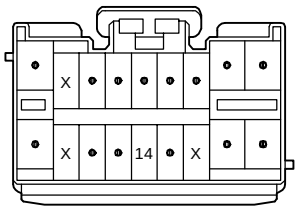
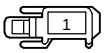
H 7, H 8 BLACK